Start clamps for round cable

Productinformatie

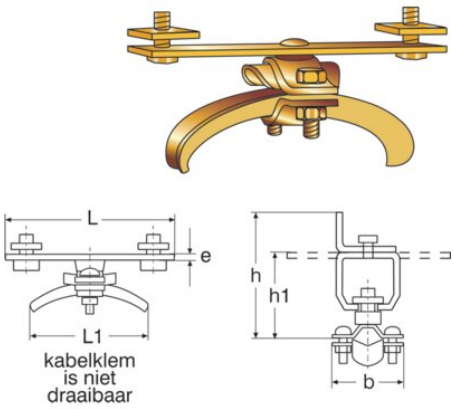

© November 2026 - All Rights Reserved

REMA 75 YEARS HOISTING & LIFTING Work made easy.

Start clamps for round cable

Technische gegevens

Artikelnr.	Code	Type - Model	Type profiel	Voor kabel	B mm	E mm	H1 mm	H mm	L mm	L1 mm	Gewicht (kg)
4019001	8717365018596	135E-8/15	100	8-15	40	4	50	73	100	70	0,15
4019003	8717365018602	135E-16/24	100	16-24	50	4	55	78	100	100	0,2
4019011	8717365018619	335E-8/15	300	8-15	40	5	69	95	150	70	0,29
4019021	8717365018657	435E-8/15	400	8-15	40	5	79	114	150	70	0,3
4019013	8717365018626	335E-16/24	300	16-24	50	5	74	100	150	100	0,33
4019023	8717365020438	435E-16/24	400	16-24	50	5	84	119	150	100	0,33

REMA Hoisting & Lifting
info@rema.eu
+31433631777
© November 2026 - All Rights Reserved