REMA HOISTING & LIFTING Work made easy.

Dynamometer 05TX/RX with RX hand read receiver

Product information

Mechanical properties

- Aluminum housing
- Alloy steel pulling unit
- Test load 2 x WLL (without losing accuracy)
- Safety factor 5 x WLL
- International Protection Rating / Ingress Protection: IP65 (EN60529)

Electrical specifications

- Alkaline battery (3 x AA type)
- Battery operating time about 180 hours

Electronic specifications

- Operating temperature range between -5° C to + 55° C
- Accuracy up to approx. 0.1% of the reading value
- Battery indicator

RX-PORT electrical specifications

- Alkaline batteries (3 x AA type)
- Stand time approx. 150 hours
- Battery indicator

RX-PORT electronic specifications

- LCD display with 5 positions, 12 mm digit height
- 868 MHz frequency control
- Operating temperature range -5 ° C to + 55 ° C
- RS232 port for printer or PC connection

TX-LOAD electrical specifications

- Transmission range max. 50m

TX-LOAD electronic specifications

- 868 MHz frequency control

Standard delivery

- Bow shackles
- Remote control

Option

- Bow shackle from 10T

Marking: According to standard, CE-marked
Standard: EN 13889, EN 12100, EN 13155

Safety factor: 5

Part Code	GTIN No.	WLL ton	Model	Shackle	Resolution kg	A mm	B mm	C mm	D mm	E mm	F mm	Weight kg
1513005	8717365111563	3,2	DSD05TX/RX-3.2T	3,25t in.	1	199	69	130	25	269	20	4,7
1513007	8717365111570	6,3	DSD05TX/RX-6.3T	6,5t in.	2	213	69	144	35	348	26	7
1513009	8717365112010	10	DSD05TX/RX-10.0T	12t ex.	5	265	100	181	50	455	36	9,6
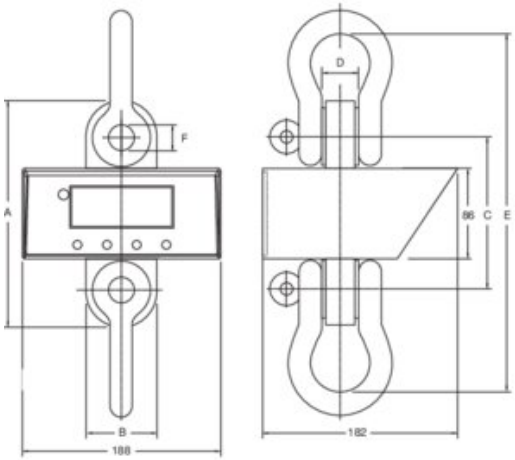
Blueprint