REMA 75 YEARS HOISTING & LIFTING Work made easy.

Round cable carriage

Product information

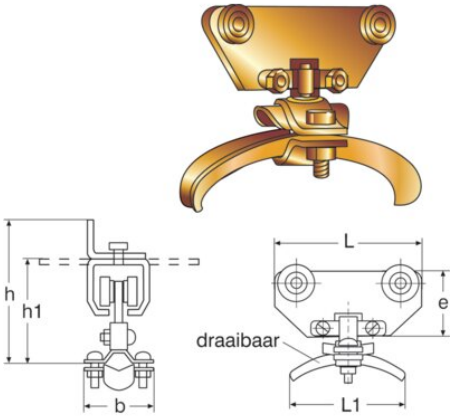

© November 2026 - All Rights Reserved

REMA® 75 YEARS HOISTING & LIFTING Work made easy.

Round cable carriage

Technical data

Part code	Code	Model	Profile type	For cable mm	B mm	E mm	H1 mm	H mm	L mm	L1 mm	Weight kg
4017001	8717365018374	135-8/15	100	8-15	40	40	68	91	90	70	0.26
4017003	8717365018381	135-16/24	100	16-24	50	40	73	96	90	100	0.31
4017011	8717365018398	335-8/15	300	8-15	40	60	90	116	100	70	0.55
4017013	8717365018404	335-16/24	300	16-24	50	60	95	121	100	100	0.62
4017021	8717365018435	435-8/15	400	8-15	40	70	104	140	100	70	0.7
4017023	8717365018442	435-16/24	400	16-24	50	70	106	142	100	100	0.75

REMA Hoisting & Lifting
info@rema.eu
+31433631777
© November 2026 - All Rights Reserved