REMA 75 YEARS HOISTING & LIFTING Work made easy.

CBV beam lifting clamps

Product information



Designed for safe lifting and transportation of steel beams in vertical position.

Properties

- The lifting eye is placed as far as possible in the center of gravity of the beam to be hoisted

Application

- For vertical lifting, transportation and stacking of steel (H) beams, profiles and structures where the load must stay perfectly in position
- Especially recommended for transportation and stacking of steel (H) beams (e .g . when sawing of steel beams, stacking of steel beams and building of steel constructions)
- Jaw openings available from: 0 to 25 mm.

... *Read more*

Marking: According to standard, CE-mark
Standard: EN 12100, EN 13155
Note: The plate surface of the material must have a hardness level of max. HrC 37/345 Hb
Warning: Minimum weight to be lifted is 10% of the safe workload.

Safety factor: 5

REMA Hoisting & Lifting
info@rema.eu
+31433631777

© November 2026 - All Rights Reserved

REMA 75 YEARS HOISTING & LIFTING Work made easy.

CBV beam lifting clamps

Blueprint

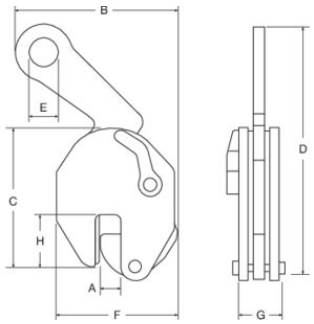

Technical data

Part code	GTIN No.	WLL ton	Jaw width mm	Model	A mm	B mm	C mm	D mm	E mm	F mm	G mm	H mm	Weight kg
3313000	8717365015205	1	0-15	CBV-1.0	0-15	175	150	226	35	130	35	47	4
3313001	8717365015212	2	0-20	CBV-2.0	0-20	265	200	345	60	165	56	67	8
3313002	8717365023101	3	0-25	CBV-3.0	0-25	325	235	410	72	192	77	65	16

REMA Hoisting & Lifting
info@rema.eu
+31433631777
© November 2026 - All Rights Reserved